Code article 86.D069.1331.02

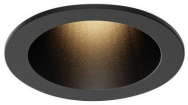

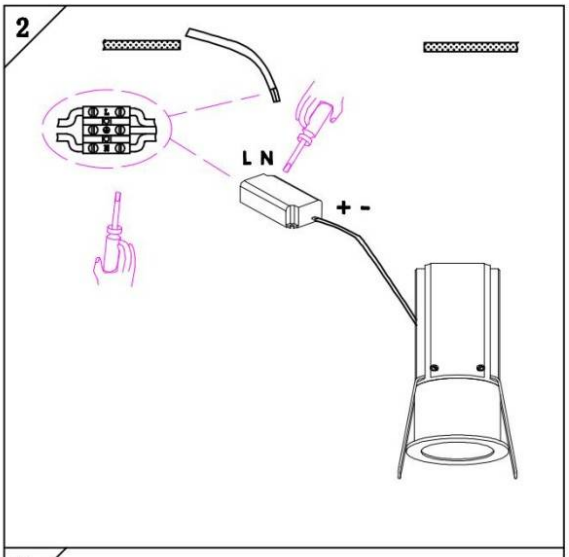
2
L N
+ -

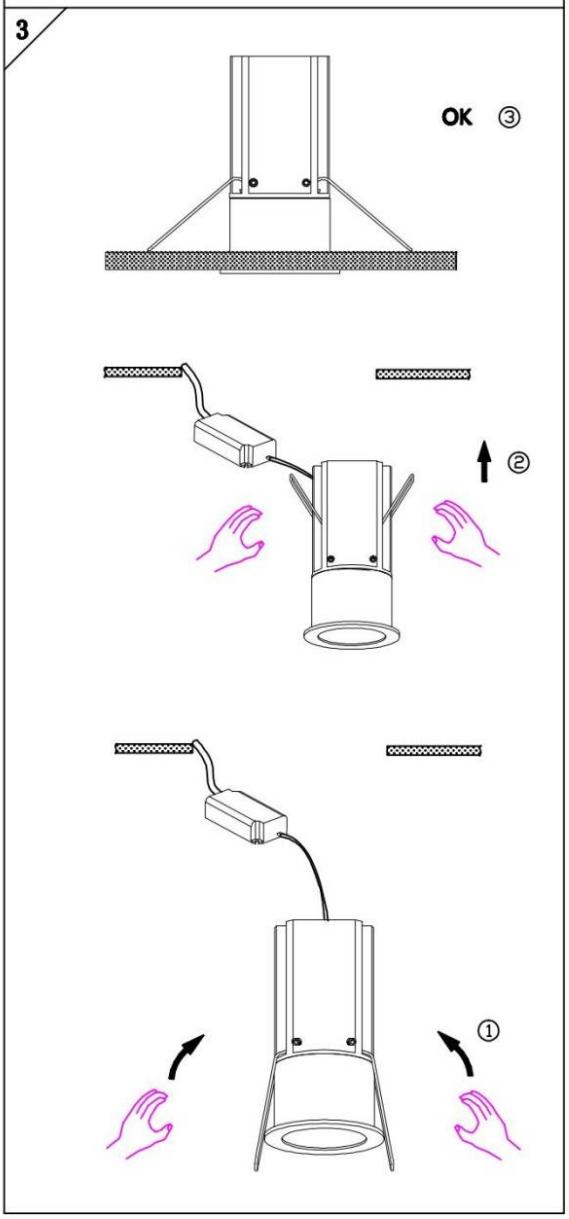
3
OK ③
②
①

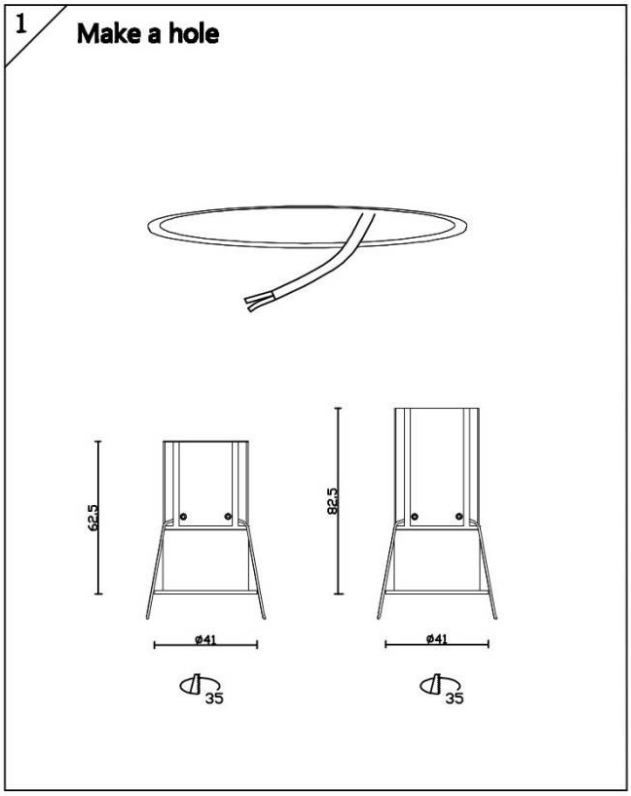
1
Make a hole
62,5
82,5
ø41
ø41
35
35